DUNE
VL19931-UNV

VANITY

PROJECT

VL19931-BN-UNV
Brushed Nickel

VL19931-BK-UNV
Black

DESCRIPTION

Multiple spun aluminum cones are connected inline and direct light downwards from the geometric linear pendant. The Dune series utilizes classic minimalist lamp shapes yet in reduced scale to elegant effect. The LED spot sources are focused by diminutive reflectors housed within the exquisitely turned shades. Available in multiple configurations and finishes.

SPECIFICATION DETAILS

Fixture Dimensions	W30-1/4" x H2-3/4" x E4-1/2"
Light Source	LED with DC Driver
Wattage	16W
Total Lumens	1425lm
Delivered Lumens	BK-1375lm*; BN-1400lm*
Voltage	120-277V
Color Temperature	3000K
CRI (Ra)	90CRI
Optional Color Temps	2700K - 5000K Available, Minimum Order Quantities Apply
LED Rated Life	50,000 hours
Dimming	100% - 10%, TRIAC or ELV Dimmer (Not Included)
Diffuser Details	Parabolic Metalized PC Reflector + Clear Lens
Shade Details	Machined Aluminum Shade
Location	Damp
Mounting Style	All Orientation; Wall;
CEC Title 24 JA8	Yes, JA8-2022
Material	Aluminum + Steel
Canopy Dimensions	W4-5/8" x H4-5/8" x E1-5/8"
Height to Center	2-1/4"
Illumination Direction	Downlight
Paint Finish	BK02; BN01;

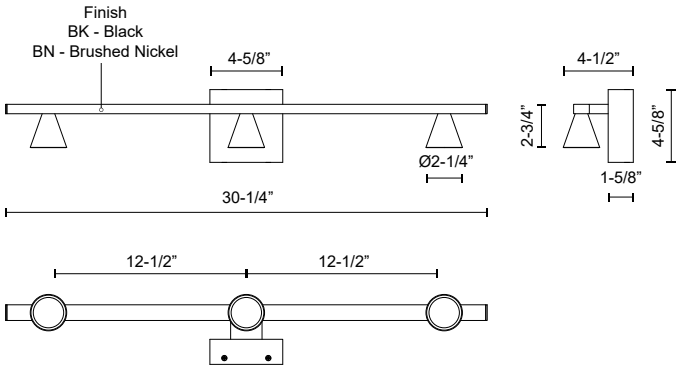

* For custom options, consult factory for details.
* For warranty information, please visit www.kuzcolighting.com/warranty

KUZCO

CANADA: 19054 28TH AVENUE - SURREY, BC V3Z 6M3
USA: 3035 E. LONE MOUNTAIN ROAD - LAS VEGAS, NV 89081

WWW.KUZCOLIGHTING.COM

© 2021 KUZCO LIGHTING. ALL RIGHTS RESERVED.

COMMENT

Intertek